Technical Specification

Frequency Range(GHz)	33.0 - 50.0	
Waveguide	WR22	
Gain(dBi)	25 Typ.	
Polarization	Linear	
3dB Beamwidth(deg)	E Plane:	9 Typ.
	H Plane:	10 Typ.
Cross Pol. Isolation(dB)	35 Typ.	
VSWR	A2 Type:	1.1:1 Typ.
	C2 Type:	1.3:1 Typ.
Output	A2 Type:	FUGP400(UG-383/U)
	C2 Type:	2.4mm-Female
Material	Cu	
Size(mm)	A2 Type:	60 x 60 x 150
	C2 Type:	60 x 60 x 175
Net Weight(Kg)	A2 Type:	0.15 Around
	C2 Type:	0.20 Around

Outline Drawing (Size: mm)

A2 Type (With FUGP400 Output)

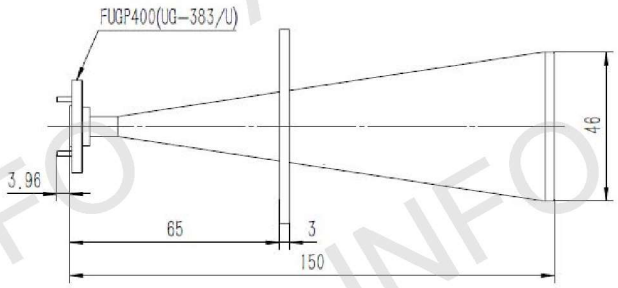

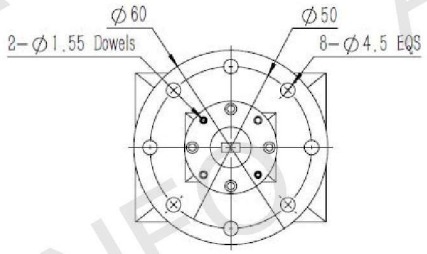

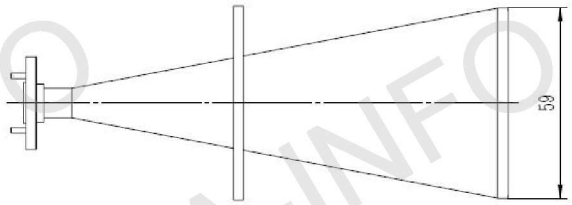

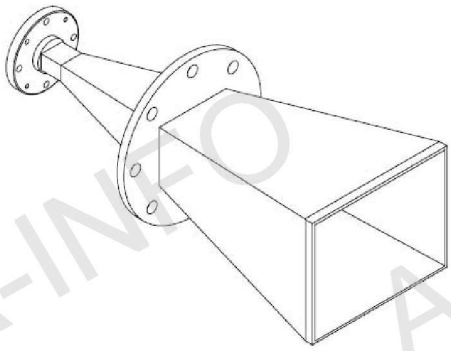

C2 Type (With 2.4mm-Female Output)

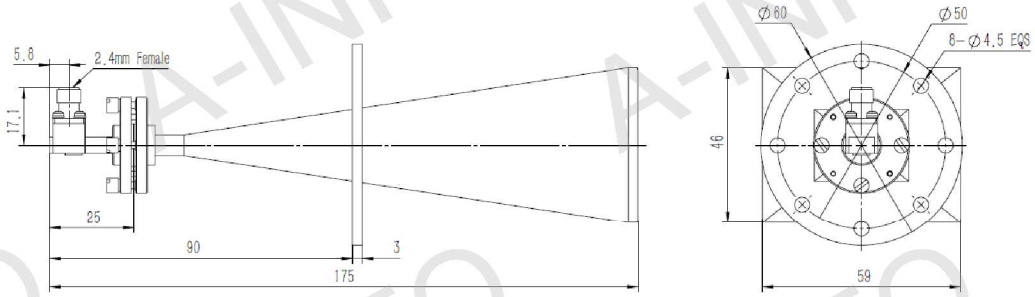

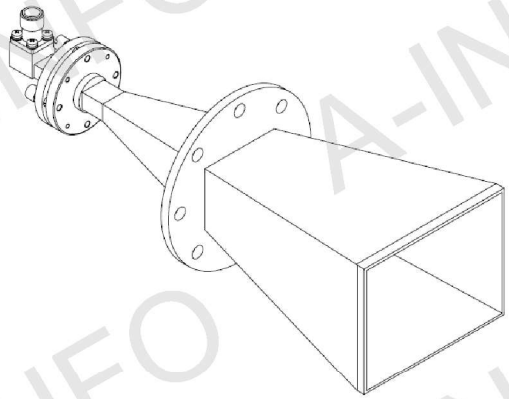

C2 Type (With 2.4mm-Female Output & Round Mounting Bracket)

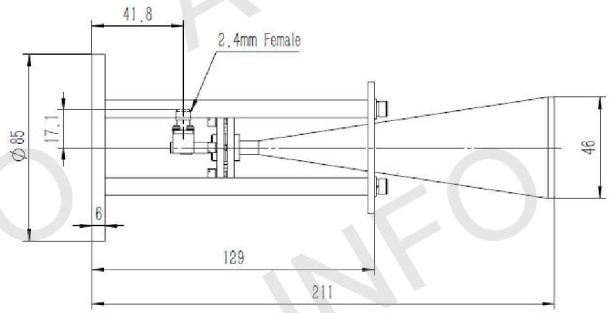

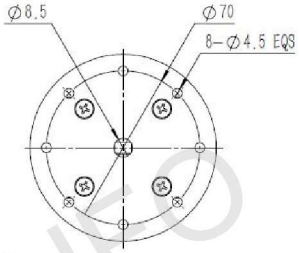

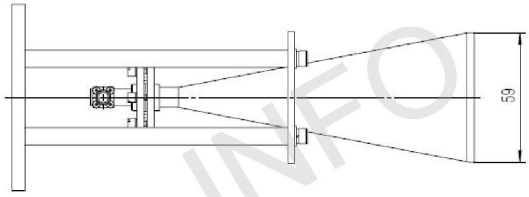

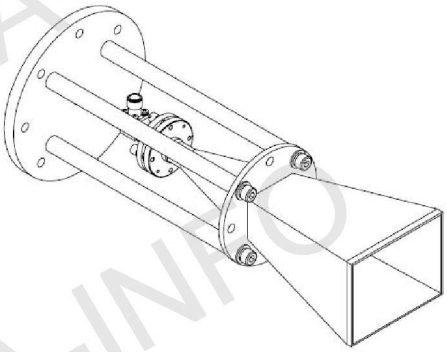

C2 Type (With 2.4mm-Female Output & L Type Mounting Bracket)

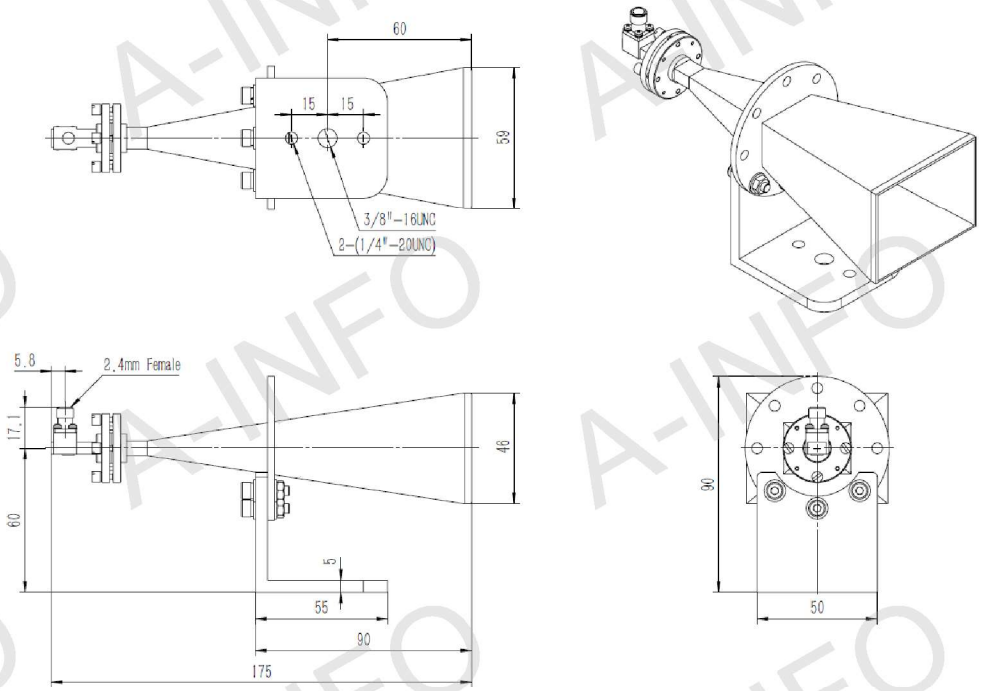

A2 Type (With Radome)

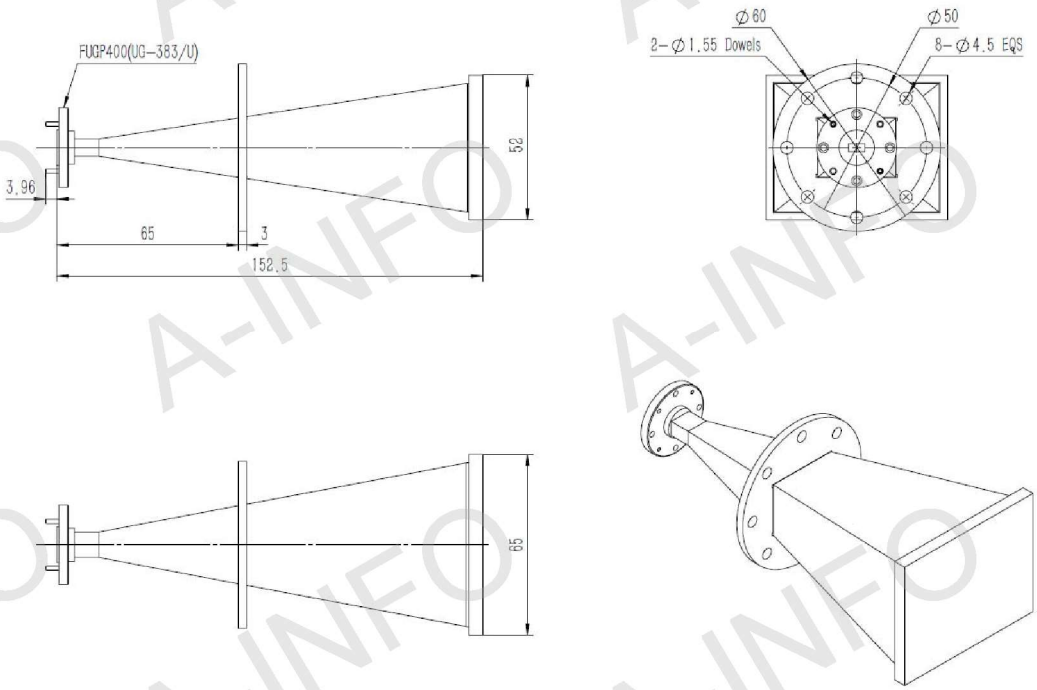

C2 Type (With 2.4mm-Female Output & Radome)

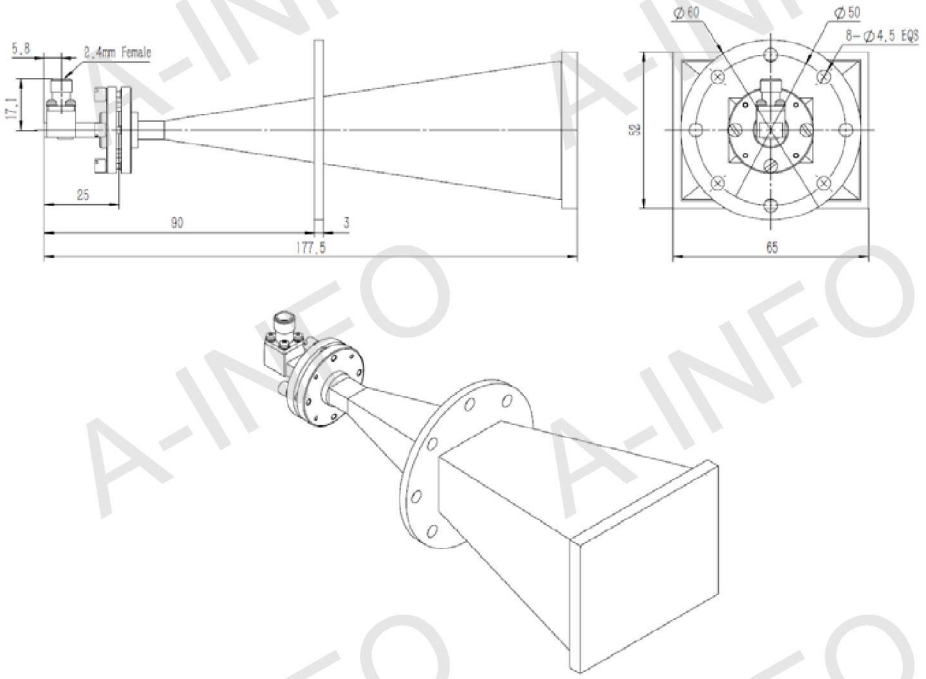

C2 Type (With 2.4mm-Female Output & Round Mounting Bracket & Radome)

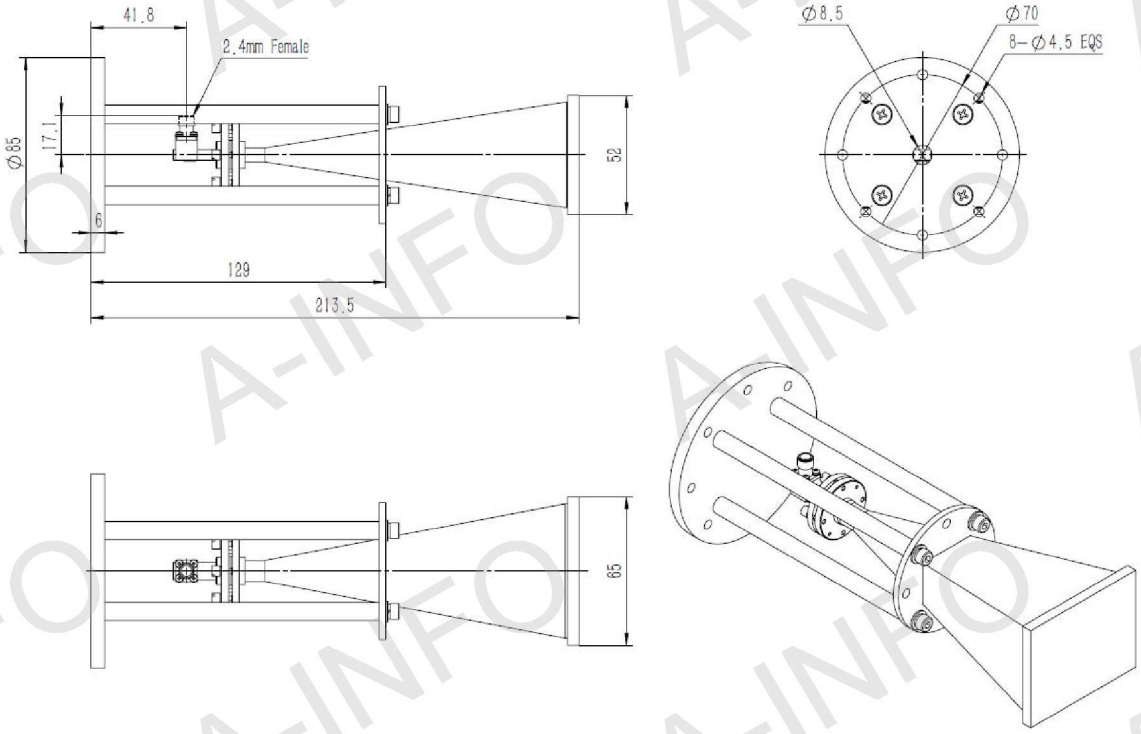

C2 Type (With 2.4mm-Female Output & L Type Mounting Bracket & Radome)

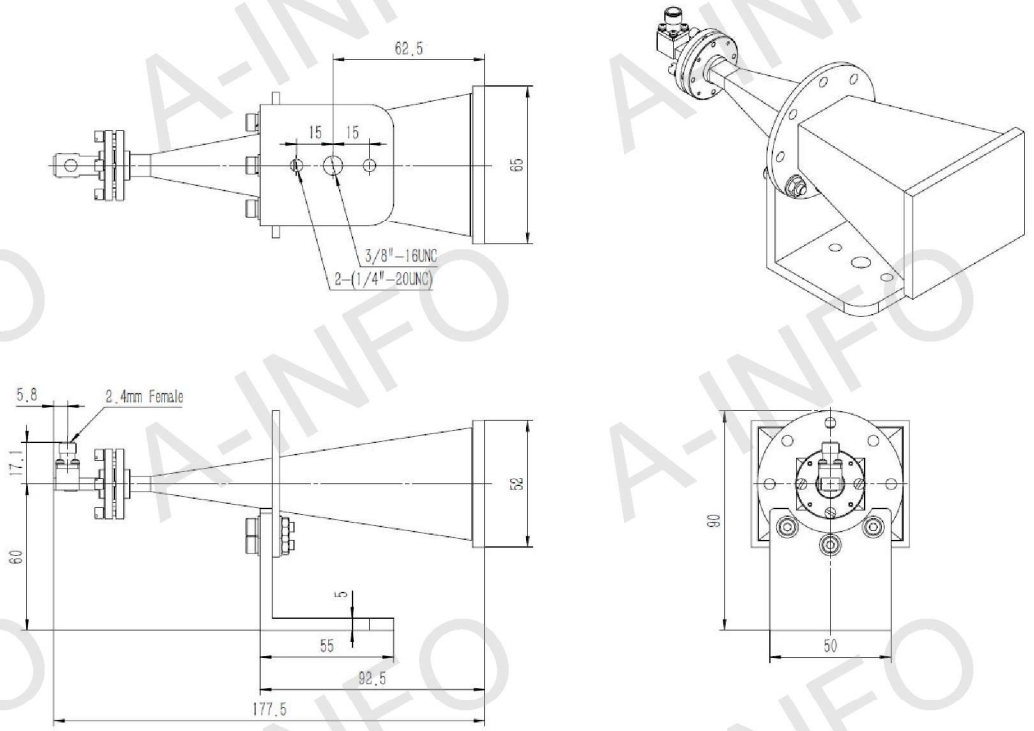

Flange Drawing (Size: mm)

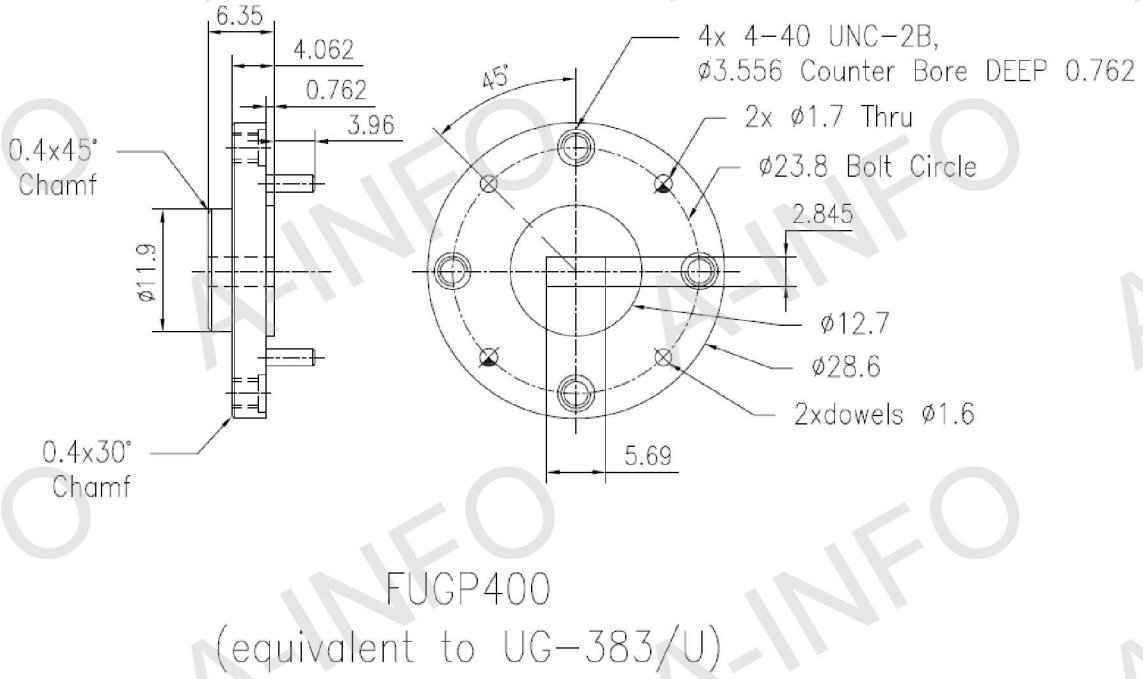

Test Results

1. Gain and Antenna Factor

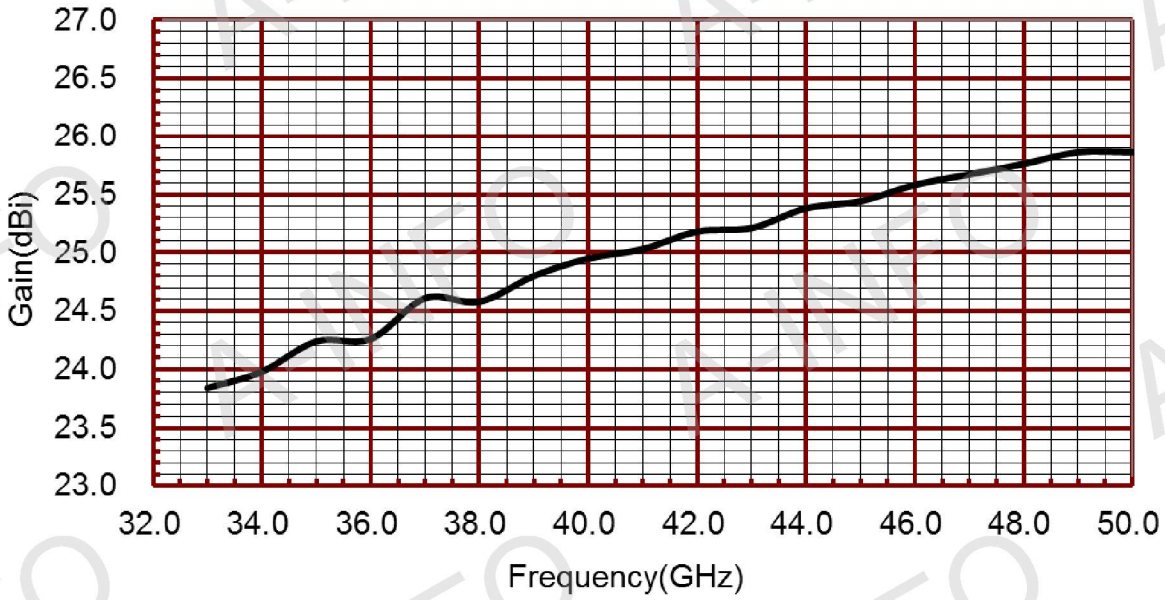

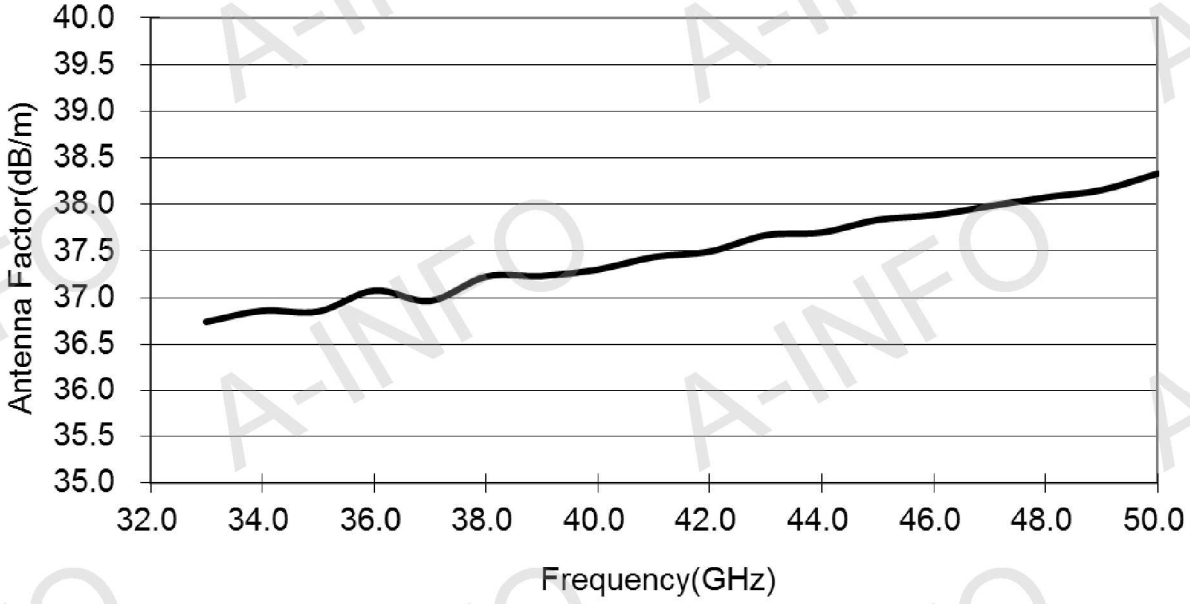

Frequency(GHz)	Gain(dB)	Antenna Factor(dB/m)
33.0	23.84	36.74
34.0	23.98	36.86
35.0	24.24	36.85
36.0	24.26	37.08
37.0	24.61	36.96
38.0	24.58	37.23
39.0	24.80	37.23
40.0	24.95	37.30
41.0	25.03	37.44
42.0	25.18	37.49
43.0	25.21	37.67
44.0	25.38	37.70
45.0	25.44	37.83
46.0	25.58	37.89
47.0	25.67	37.98
48.0	25.76	38.07
49.0	25.86	38.15
50.0	25.86	38.33

2. Cross Polarization Isolation

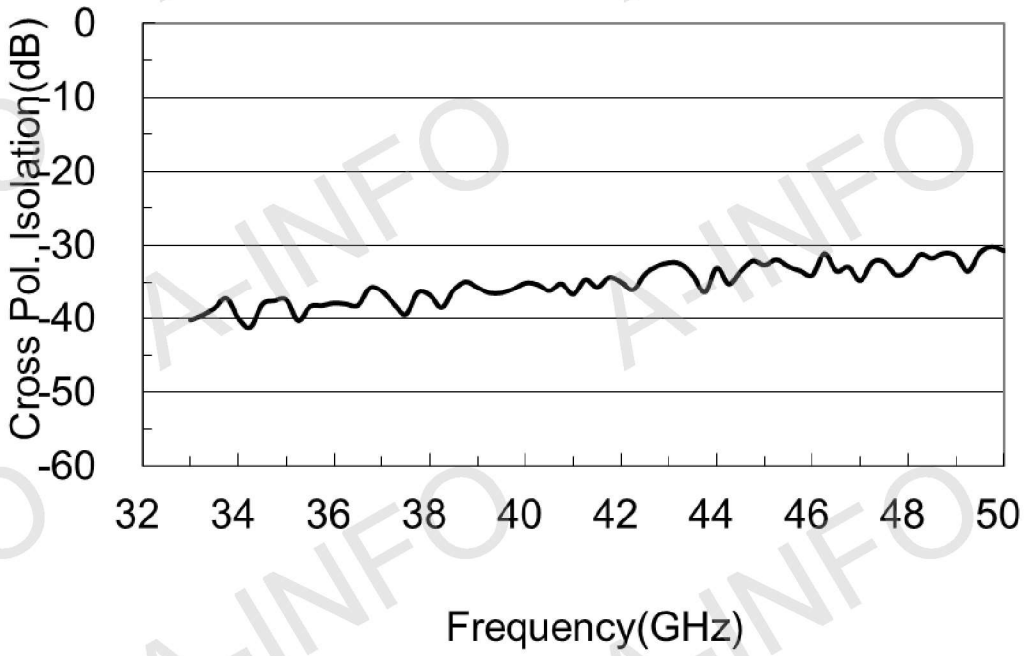

3. VSWR (WG Output)

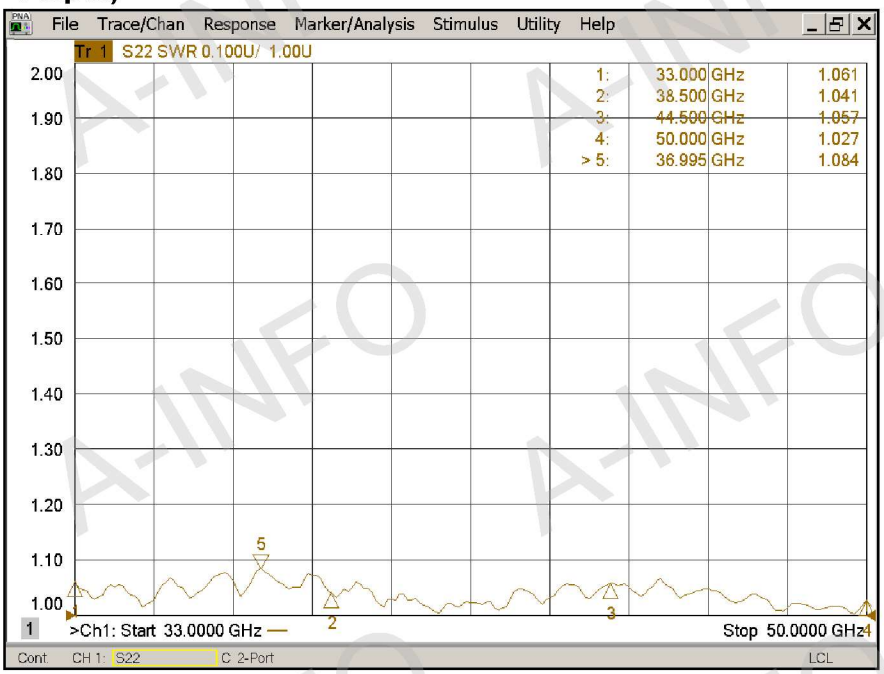

4. Pattern

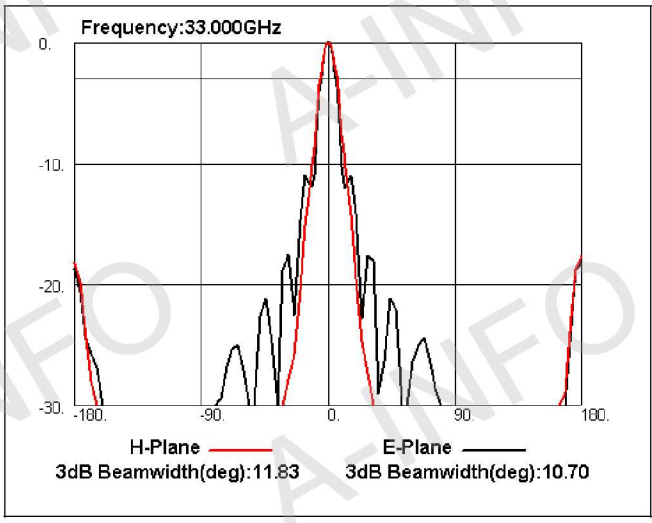
Frequency:33.000GHz
0.
-10.
-20.
-30.
-180.
-90.
0.
90.
180.
H-Plane
E-Plane
3dB Beamwidth(deg):11.83
3dB Beamwidth(deg):10.70

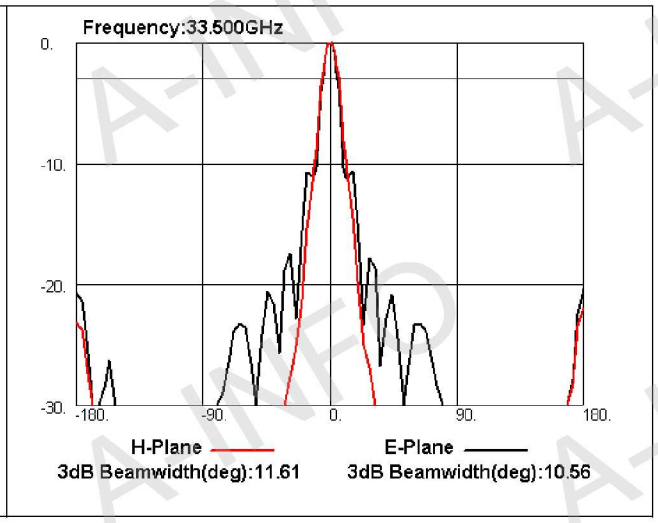
Frequency:33.500GHz
0.
-10.
-20.
-30.
-180.
-90.
0.
90.
180.
H-Plane
E-Plane
3dB Beamwidth(deg):11.61
3dB Beamwidth(deg):10.56

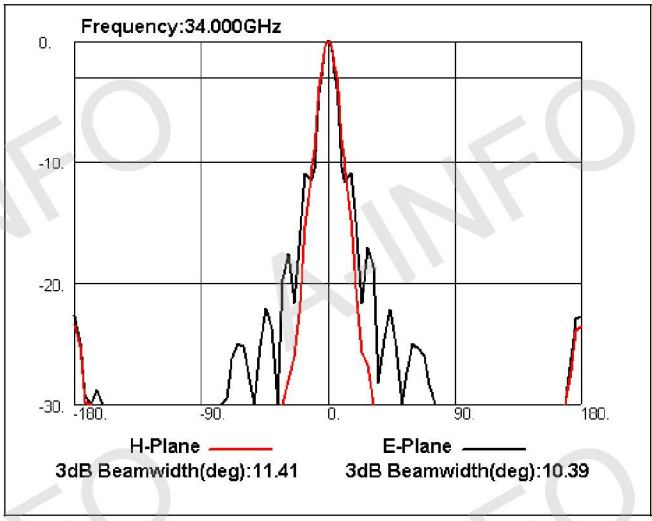
Frequency:34.000GHz
0.
-10.
-20.
-30.
-180.
-90.
0.
90.
180.
H-Plane
E-Plane
3dB Beamwidth(deg):11.41
3dB Beamwidth(deg):10.39

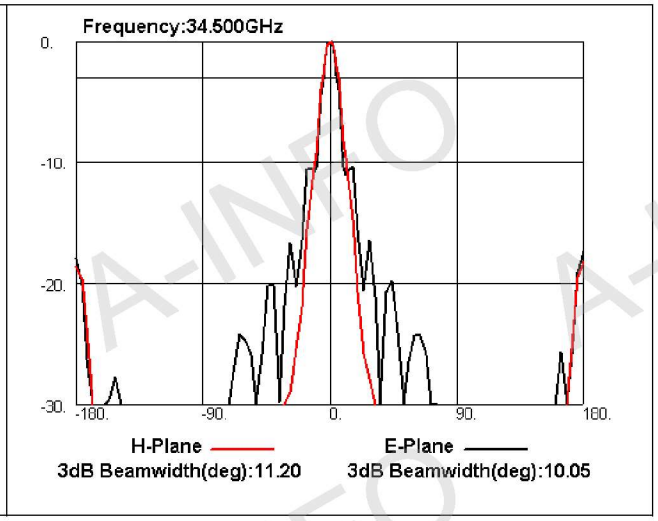
Frequency:34.500GHz
0.
-10.
-20.
-30.
-180.
-90.
0.
90.
180.
H-Plane
E-Plane
3dB Beamwidth(deg):11.20
3dB Beamwidth(deg):10.05

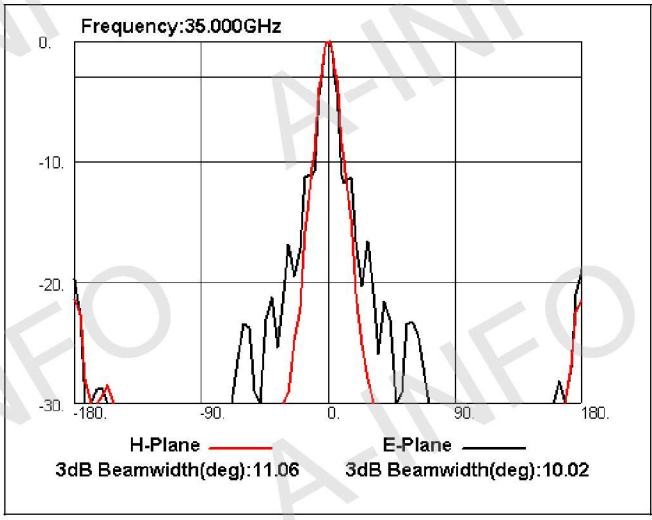
Frequency:35.000GHz
0.
-10.
-20.
-30.
-180.
-90.
0.
90.
180.
H-Plane
E-Plane
3dB Beamwidth(deg):11.06
3dB Beamwidth(deg):10.02

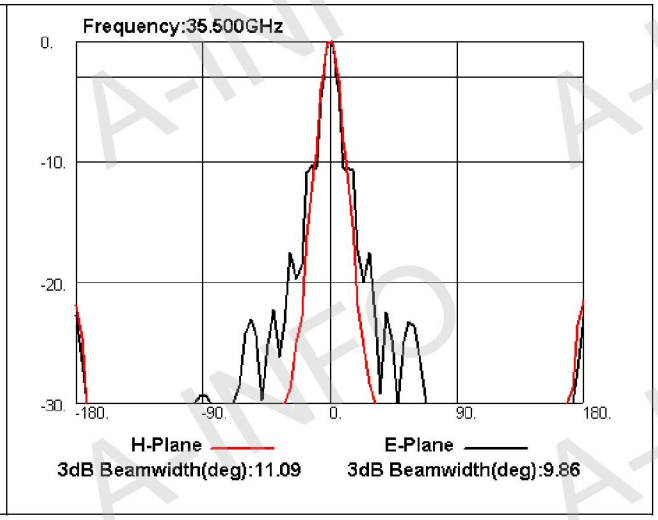
Frequency:35.500GHz
0.
-10.
-20.
-30.
-180.
-90.
0.
90.
180.
H-Plane
E-Plane
3dB Beamwidth(deg):11.09
3dB Beamwidth(deg):9.86

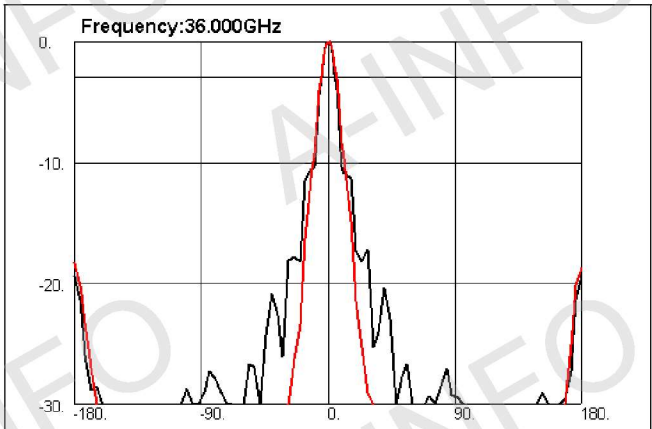

H-Plane 3dB Beamwidth(deg):11.05
E-Plane 3dB Beamwidth(deg):10.13

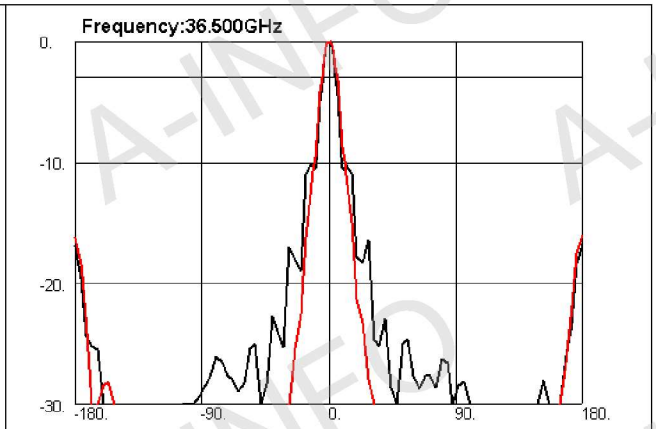

H-Plane 3dB Beamwidth(deg):10.86
E-Plane 3dB Beamwidth(deg):9.65

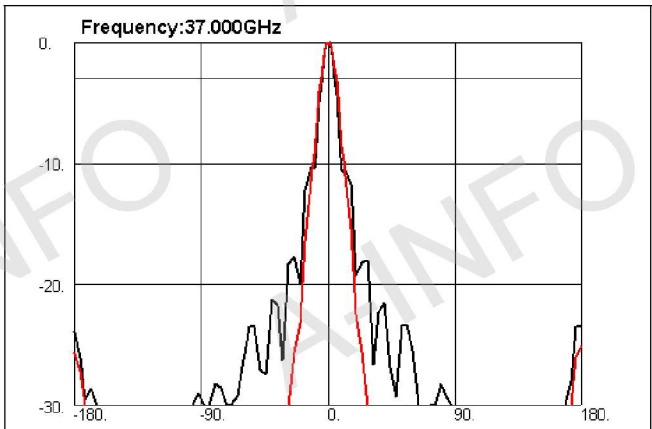

H-Plane 3dB Beamwidth(deg):10.89
E-Plane 3dB Beamwidth(deg):9.67

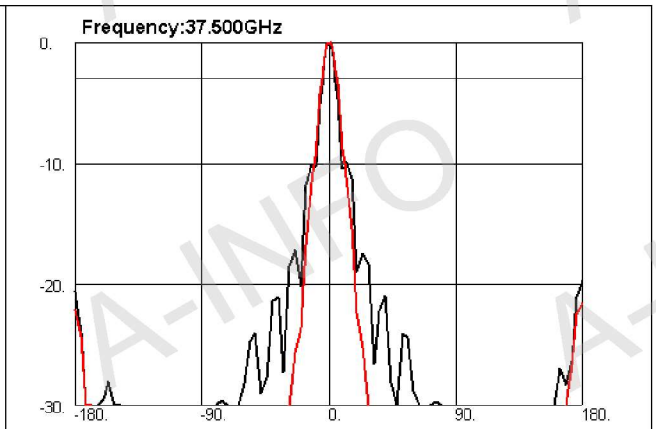

H-Plane 3dB Beamwidth(deg):10.67
E-Plane 3dB Beamwidth(deg):9.35

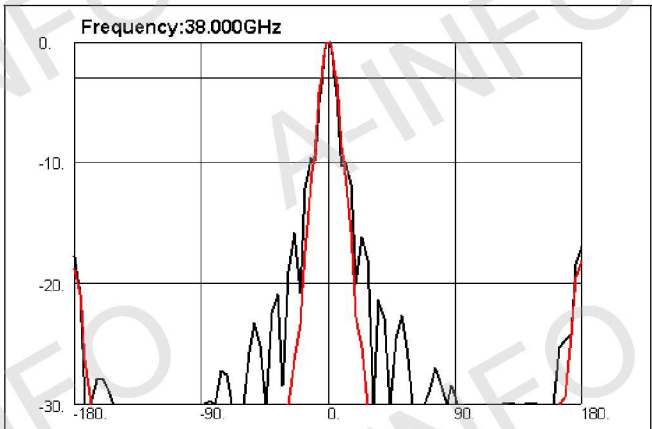

H-Plane 3dB Beamwidth(deg):10.65
E-Plane 3dB Beamwidth(deg):9.56

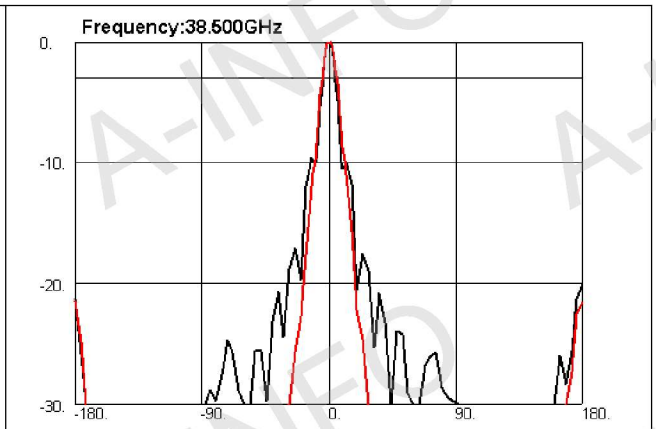

H-Plane 3dB Beamwidth(deg):10.50
E-Plane 3dB Beamwidth(deg):9.21

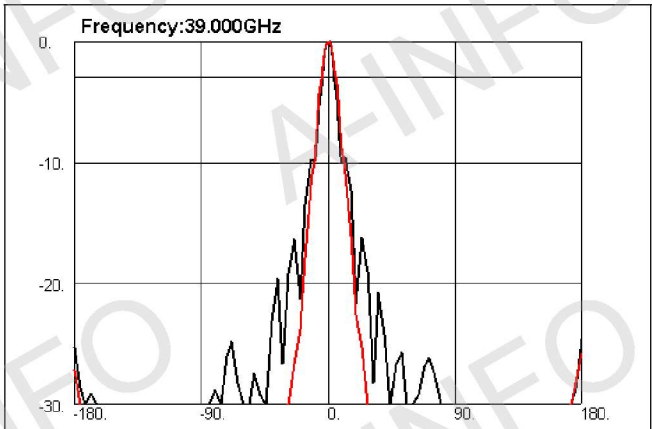

H-Plane 3dB Beamwidth(deg):10.42
E-Plane 3dB Beamwidth(deg):9.17

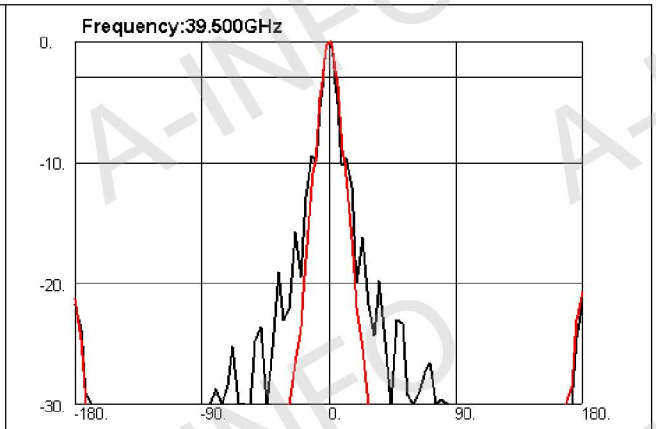

H-Plane 3dB Beamwidth(deg):10.14
E-Plane 3dB Beamwidth(deg):8.99

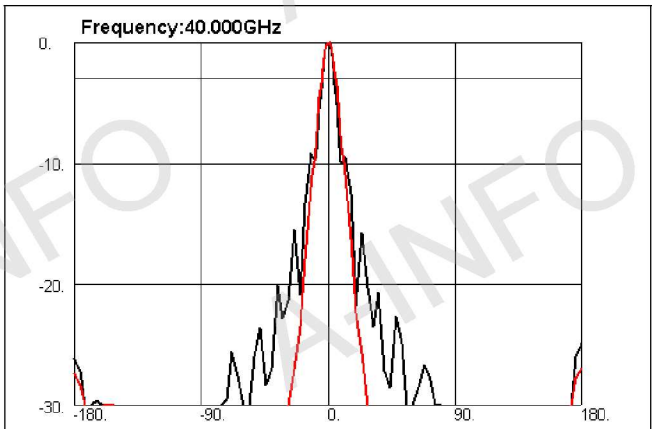

H-Plane 3dB Beamwidth(deg):10.19
E-Plane 3dB Beamwidth(deg):9.01

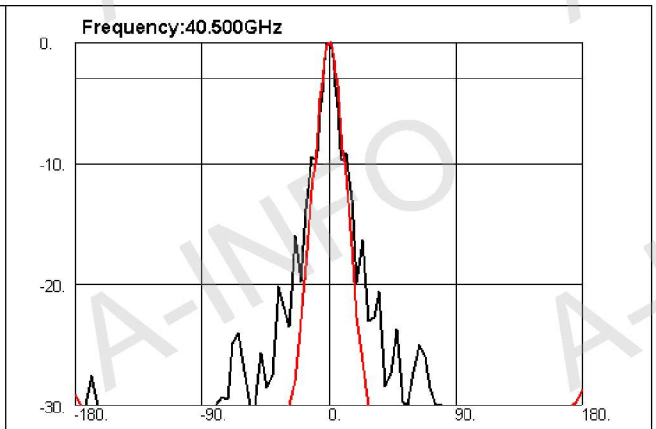

H-Plane 3dB Beamwidth(deg):10.15
E-Plane 3dB Beamwidth(deg):8.75

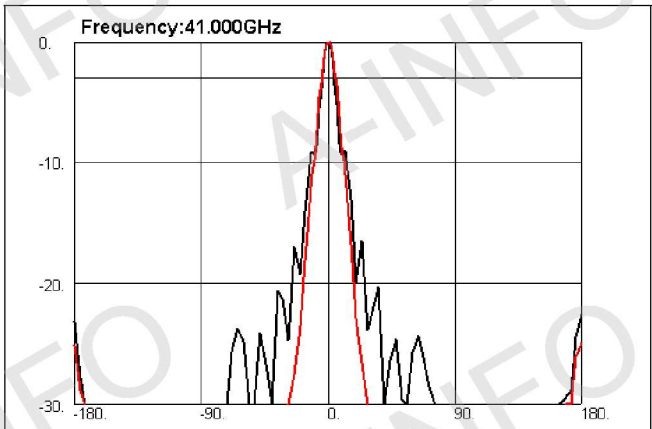

H-Plane 3dB Beamwidth(deg):10.16
E-Plane 3dB Beamwidth(deg):8.92

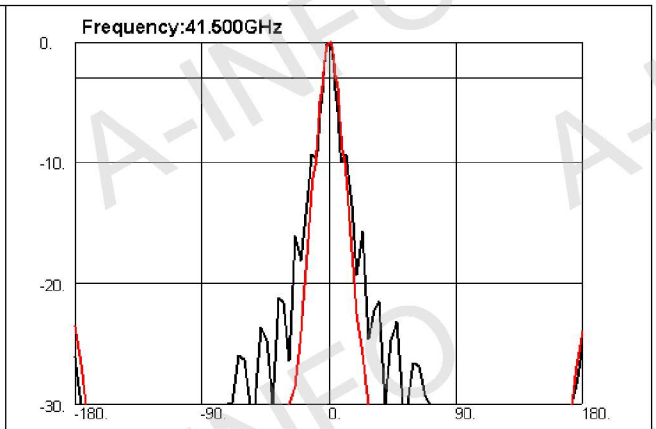

H-Plane 3dB Beamwidth(deg):9.76
E-Plane 3dB Beamwidth(deg):8.46

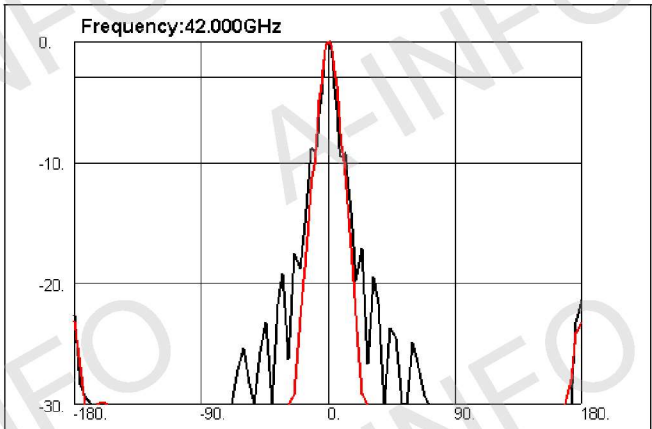

H-Plane
3dB Beamwidth(deg):10.00
E-Plane
3dB Beamwidth(deg):8.46

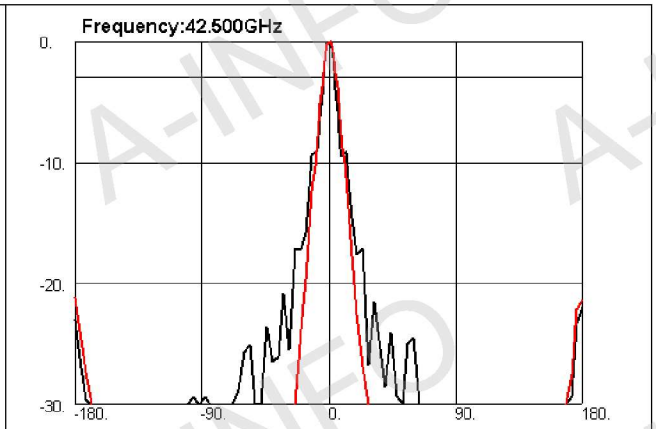

H-Plane
3dB Beamwidth(deg):9.67
E-Plane
3dB Beamwidth(deg):8.42

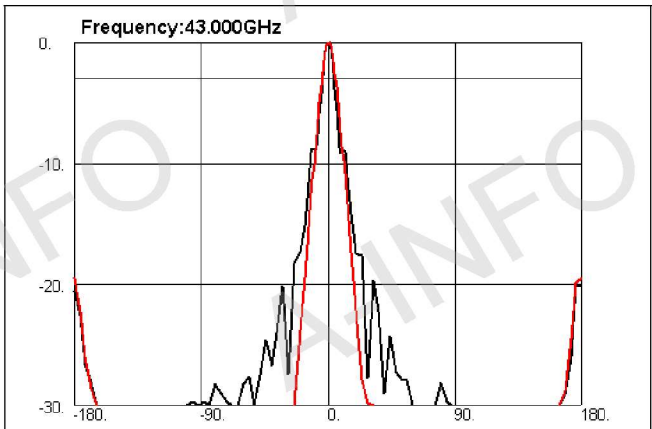

H-Plane
3dB Beamwidth(deg):9.86
E-Plane
3dB Beamwidth(deg):8.52

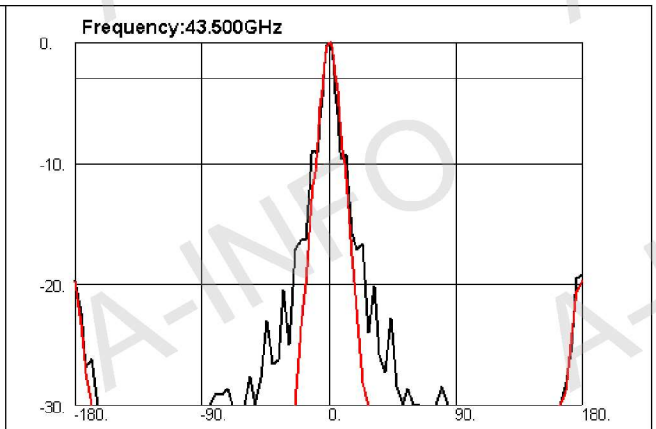

H-Plane
3dB Beamwidth(deg):9.54
E-Plane
3dB Beamwidth(deg):8.20

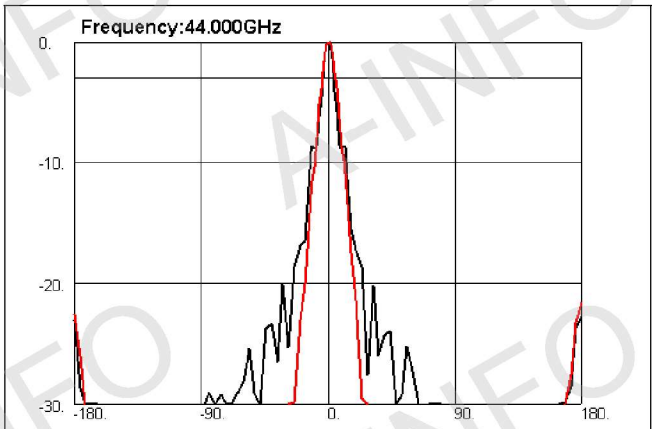

H-Plane
3dB Beamwidth(deg):9.76
E-Plane
3dB Beamwidth(deg):8.31

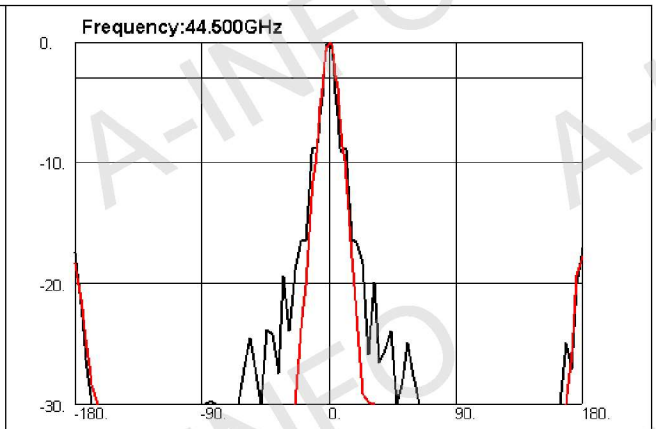

H-Plane
3dB Beamwidth(deg):9.54
E-Plane
3dB Beamwidth(deg):8.19

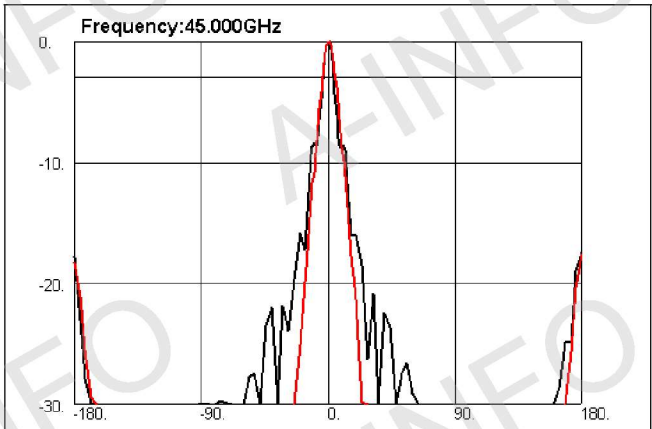

H-Plane 3dB Beamwidth(deg):9.43
E-Plane 3dB Beamwidth(deg):7.91

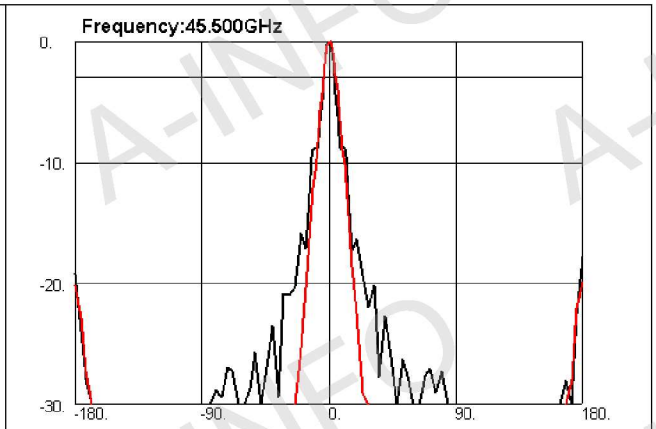

H-Plane 3dB Beamwidth(deg):9.12
E-Plane 3dB Beamwidth(deg):7.98

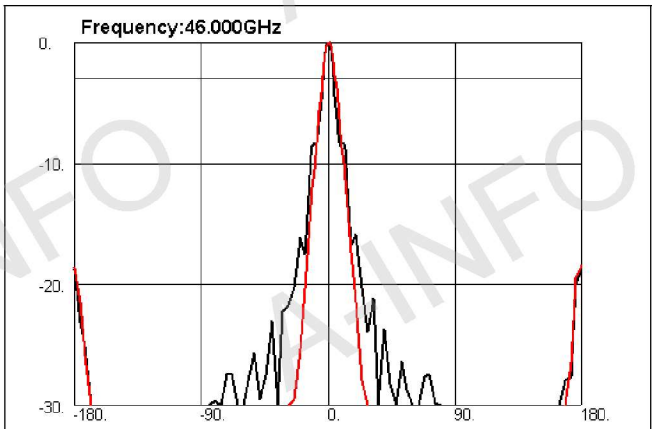

H-Plane 3dB Beamwidth(deg):9.44
E-Plane 3dB Beamwidth(deg):8.01

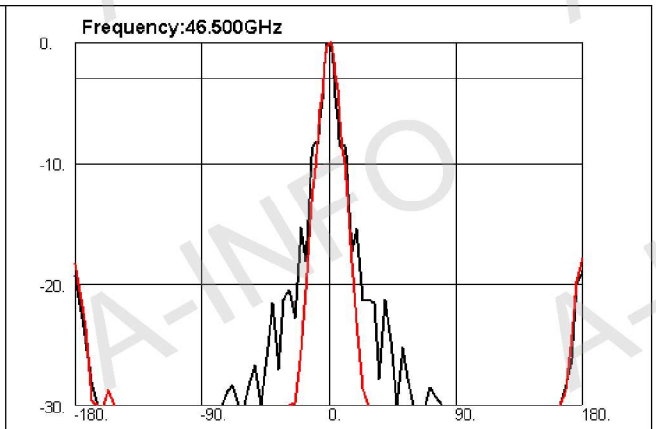

H-Plane 3dB Beamwidth(deg):9.32
E-Plane 3dB Beamwidth(deg):8.07

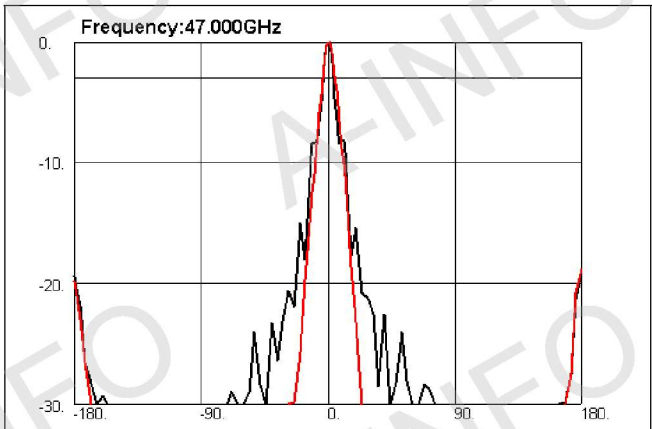

H-Plane 3dB Beamwidth(deg):9.15
E-Plane 3dB Beamwidth(deg):7.73

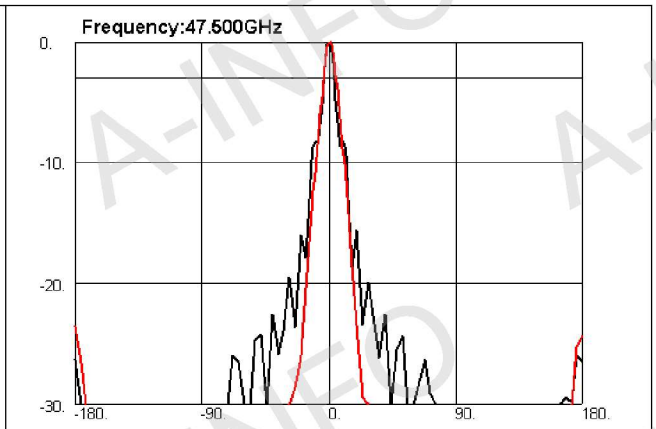

H-Plane 3dB Beamwidth(deg):9.13
E-Plane 3dB Beamwidth(deg):7.61

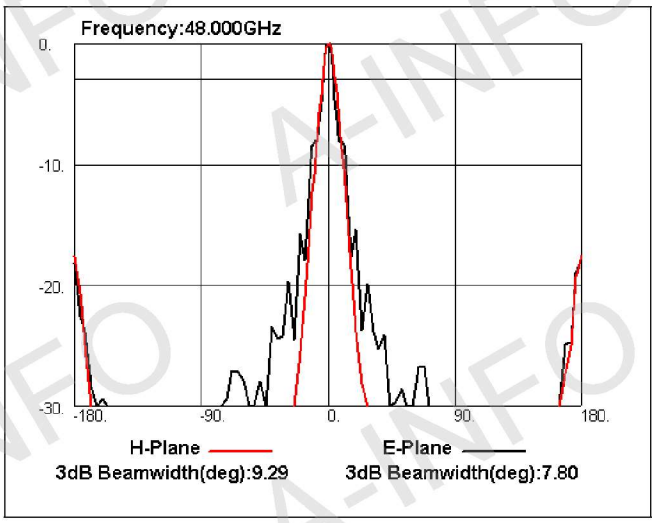
Frequency:48.000GHz
0.
-10.
-20.
-30.
-180.
-90.
0.
90.
180.
H-Plane
E-Plane
3dB Beamwidth(deg):9.29
3dB Beamwidth(deg):7.80

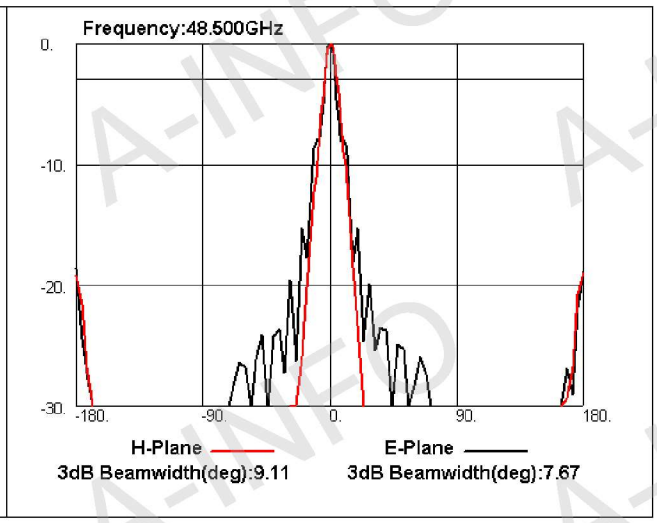
Frequency:48.500GHz
0.
-10.
-20.
-30.
-180.
-90.
0.
90.
180.
H-Plane
E-Plane
3dB Beamwidth(deg):9.11
3dB Beamwidth(deg):7.67

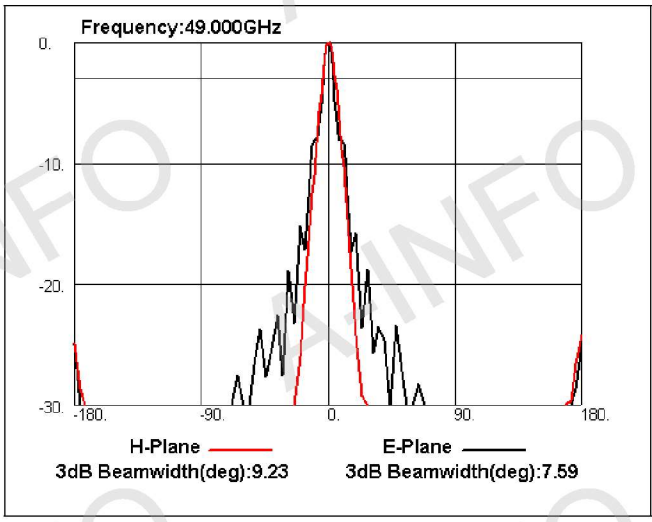
Frequency:49.000GHz
0.
-10.
-20.
-30.
-180.
-90.
0.
90.
180.
H-Plane
E-Plane
3dB Beamwidth(deg):9.23
3dB Beamwidth(deg):7.59

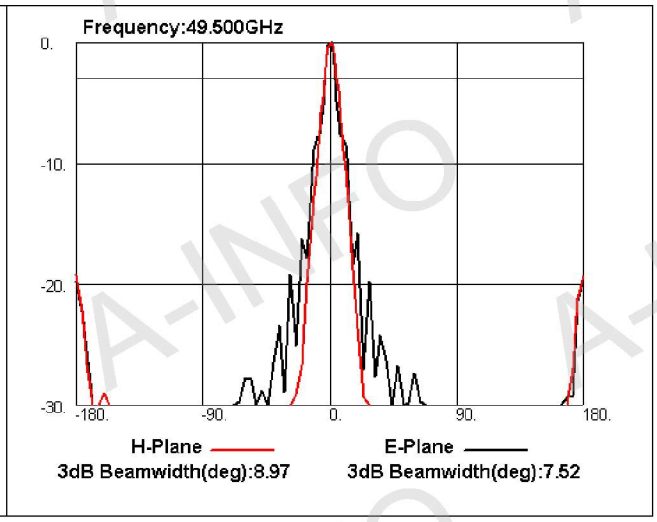
Frequency:49.500GHz
0.
-10.
-20.
-30.
-180.
-90.
0.
90.
180.
H-Plane
E-Plane
3dB Beamwidth(deg):8.97
3dB Beamwidth(deg):7.52

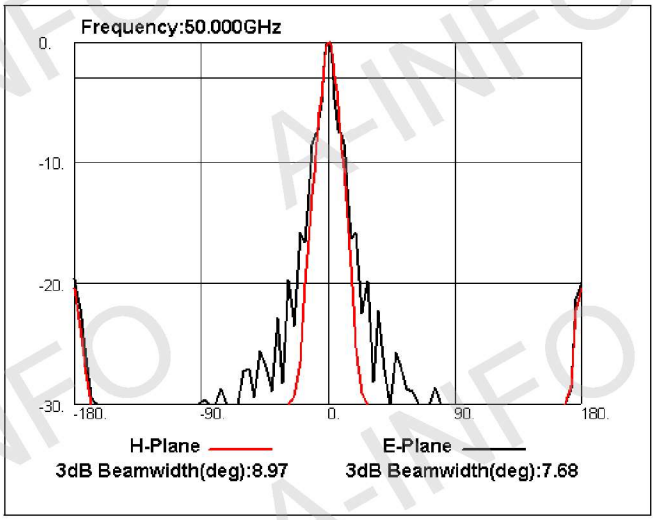
Frequency:50.000GHz
0.
-10.
-20.
-30.
-180.
-90.
0.
90.
180.
H-Plane
E-Plane
3dB Beamwidth(deg):8.97
3dB Beamwidth(deg):7.68